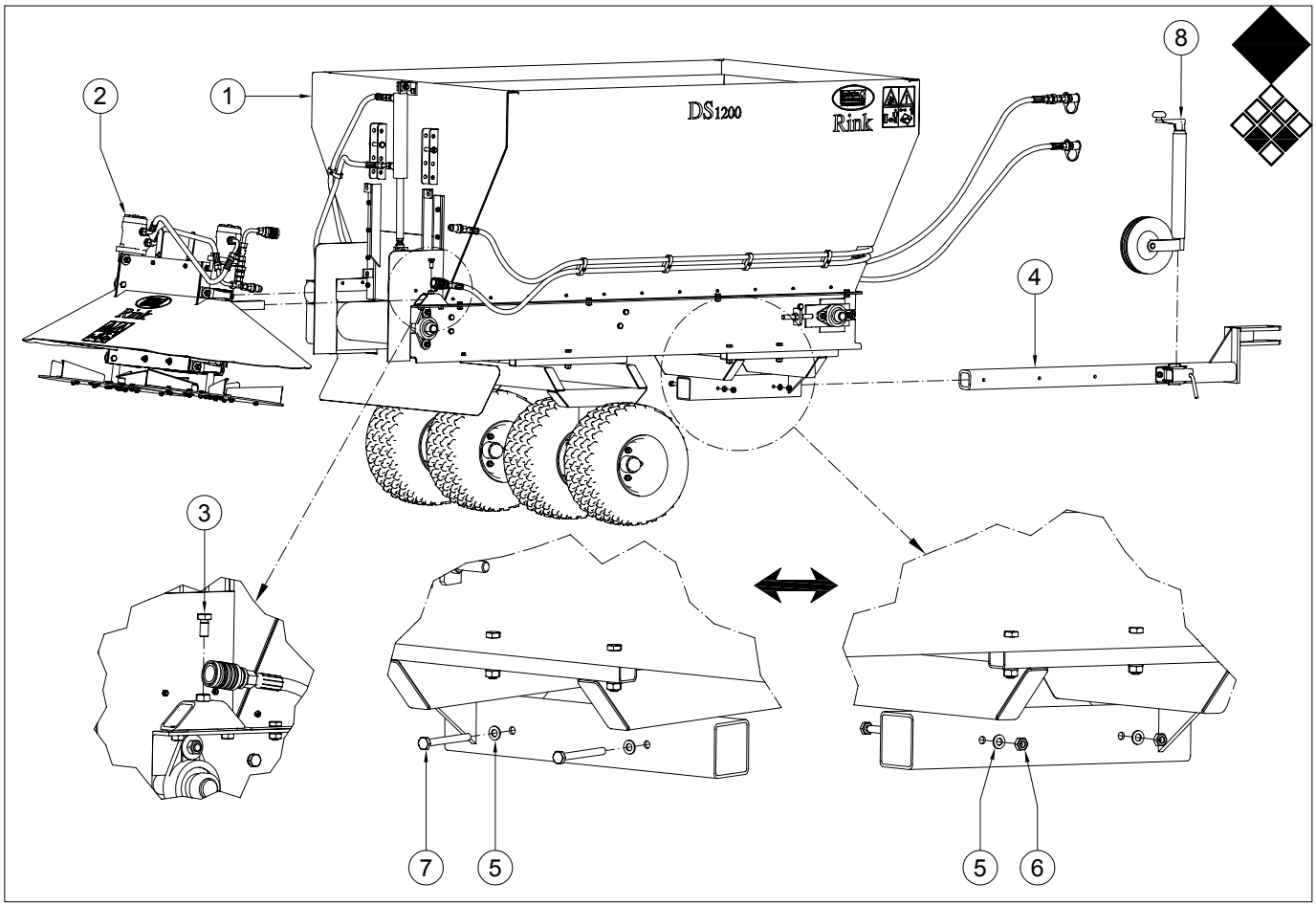

Redexim-Charterhouse Rink DS 1200 pag 01 code 0705

	PART #	DESCRIPTION	REMARKS	QUA
1		Frame	See page 2-7	1
2		Spreading device	See page 8-9	1
3	802.120.300	Bolt M12 x 30		2
4		Towing bar complete	See page 10	1
5	864.100.030	Washer M10		4
6	826.100.100	Nut M10		2
7	802.101.000	Bolt M10 x 100		2
8	RGS 10727	Support tyre		1

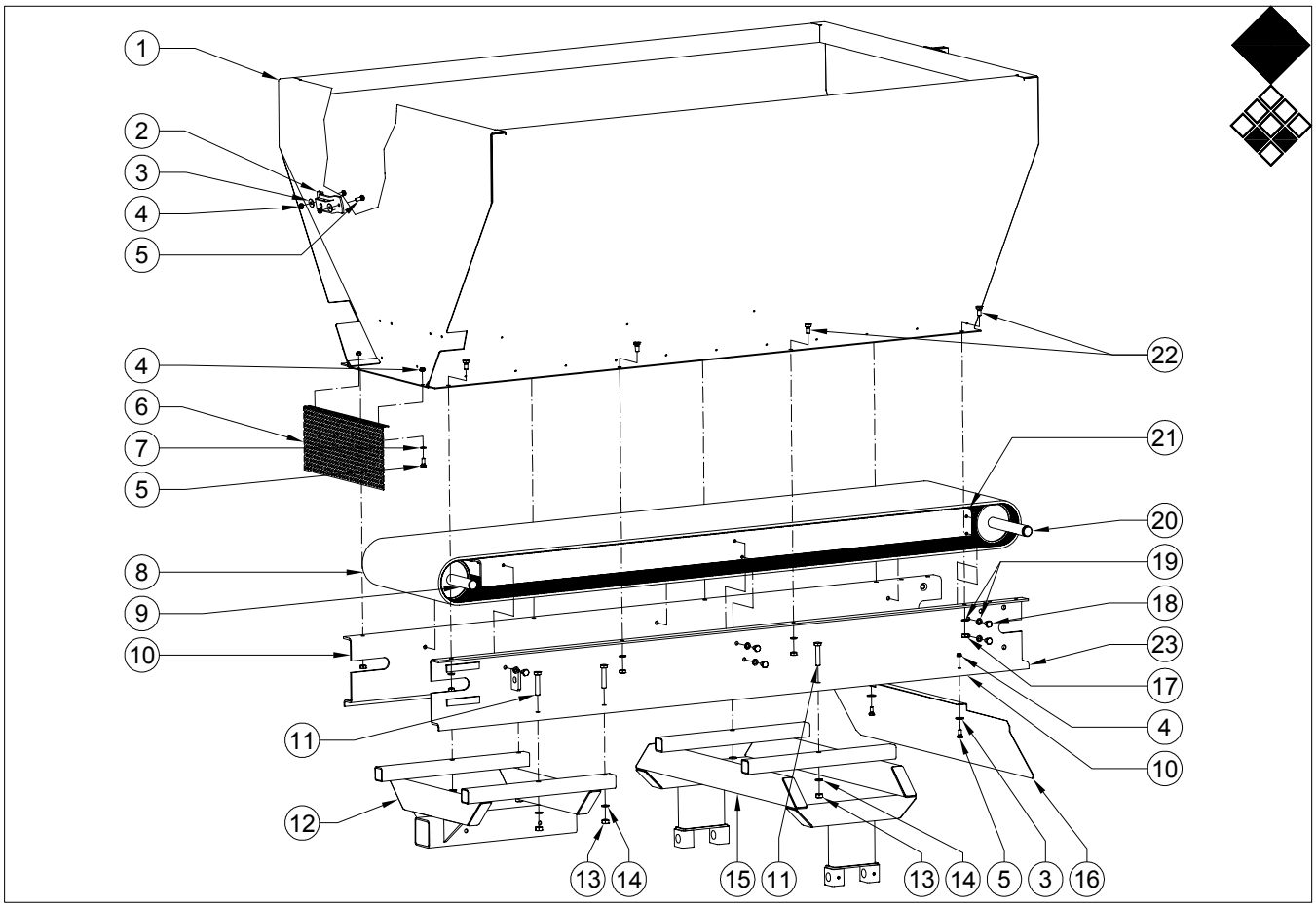

Redexim-Charterhouse Rink DS 1200 pag 02 code 0705

	PART #	DESCRIPTION	REMARKS	QUA
1	RGS 16361	Hopper DS 800		1
1	RGS 16333	hopper DS 1200		
2	RGS 10023	Bracket		2
3	864.080.031	Large washer M8		2
4	826.080.080	Nut M8		6
5	802.080.300	Bolt M8 x 30		6
6	RGS 16377	Safety guard front		1
7	864.080.030	Washer M8		4
8	RGS 10726	Conveyor belt		1
9	RGS 16326	Roller front		1
10	RGS 16330 right	Side panel right		1
11	802.120.600	Bolt M12 x 60		8
12	RGS 16348	Mounting device		1
13	826.120.120	Nut M12		8
14	864.120.020	Spring washer M12		8
15	RGS 16344	Drive frame		1
16	RGS 16312	Spreading plate		1
17	826.100.100	Nut M10		8
18	802.100.250	Bolt M10 x 25		10
19	864.100.030	Washer M10		18
20	RGS 16325	Roller rear		1
21	RGS16339	Floor		1
22	802.100.200	Bolt M10 x 20		8
23	RGS 16330 left	Side panel left		1

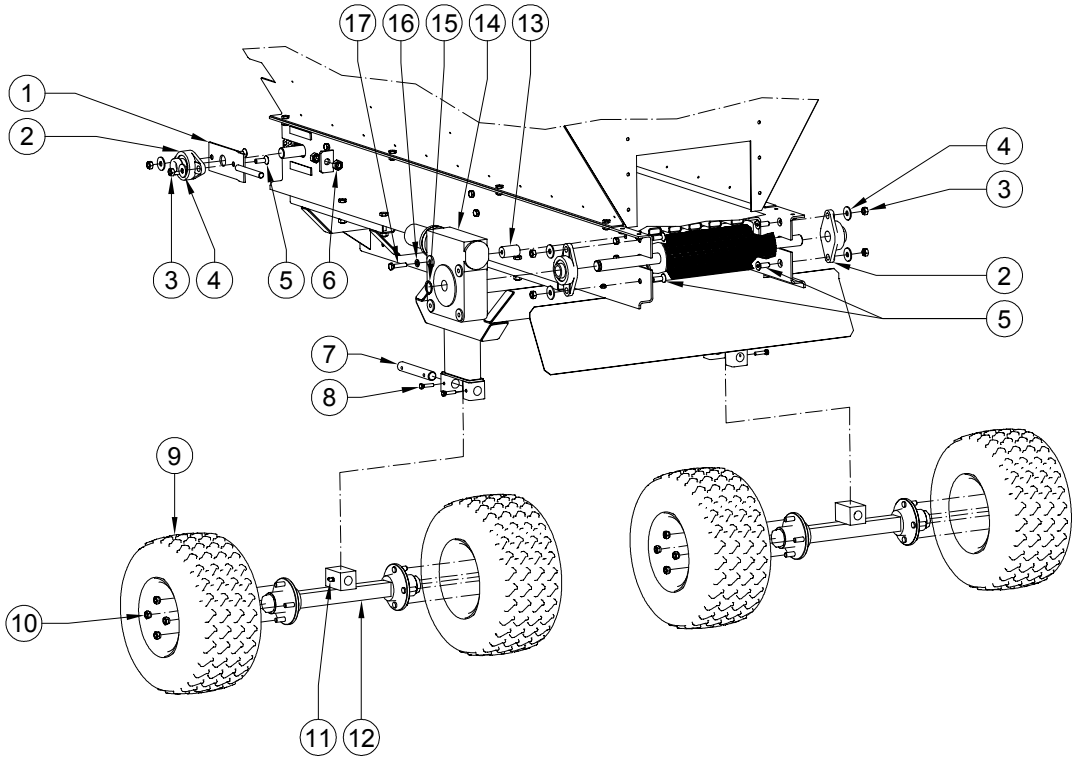

Redexim-Charterhouse Rink DS 1200 pag 03 code 0705

	PART #	DESCRIPTION	REMARKS	QUA
1	RGS 16122	Tension bolt		2
2	RGS 11001	Bearing		4
3	826.120.120	Nut M12		8
4	864.120.020	spring washer M12		8
5	802.120.400	Bolt M12 x 40		8
6	826.160.160	Nut M16		4
7	RGS 16137	Shaft		2
8	802.080.200	Bolt M8 x 20		4
9	RGS 10734	Wheel complete		4
10	844.120.120	Wheel nut 90 decree		10
11	880.080.102	Grease nippel m		2
12	RGS 16138	Axle		2
13	RGS 16161	torque support		1
14	RGS 10492	Gearbox		1
15	870.030.160	Circlip		1
16	866.120.020	circlip washer M10		1
17	802.101.000	Bolt M10 x 100		1

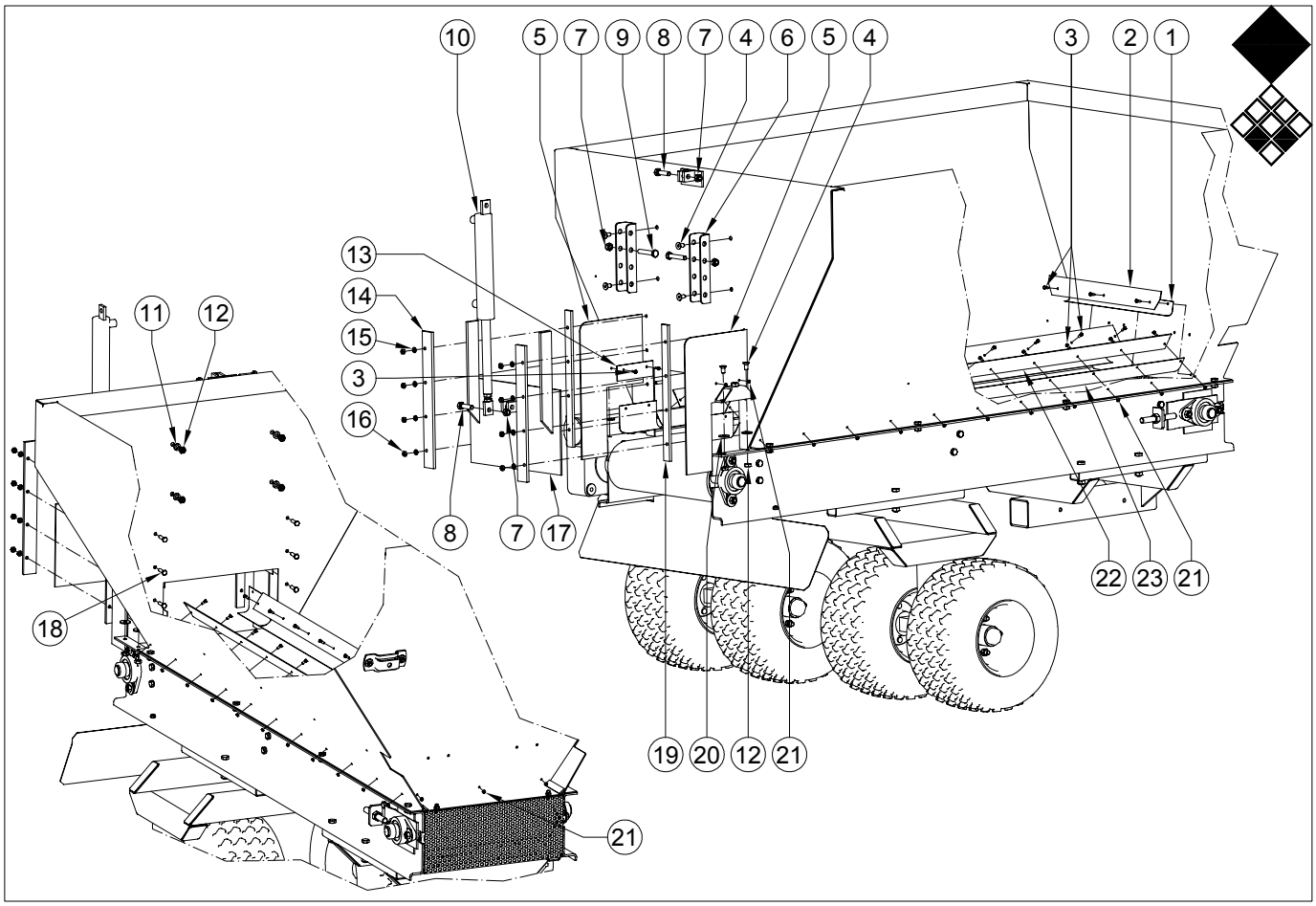

Redexim-Charterhouse Rink DS 1200 pag 04 code 0705

	PART #	DESCRIPTION	REMARKS	QUA
1	RGS 10738	Rubber front		1
2	RGS 16375	Rubber clamp strip front		1
3	804.050.160	Bolt M5 x 16		29
4	814.100.201	Conic bolt M10 x 20		8
5	RGS 16331	Sand quide plate		2
6	RGS 16360	Gate adjuster braket		2
7	830.120.120	Lock nut M12		4
8	802.120.400	Bolt M12 x 40		2
9	802.120.600	Bolt M12 x 60		2
10	RGS 10730	Hydraulic cylinder		1
11	864.100.030	Washer M10		4
12	826.100.100	Nut M10		8
13	RGS 19004	Rubber clamp strip rear aside		2
14	RGS 16358	Gate guide plate		2
15	864.080.030	Washer M8		8
16	826.080.080	Nut M8		8
17	RGS 16343	Gate		1
18	802.080.300	Bolt M8 x 30		8
19	RGS 16359	Gate distance plate		2
20	864.100.031	Large washer M10		4
21	826.050.050	Nut M5		29
22	RGS 16376	Rubbber clamp strip aside		2
23	RGS 10379	Rubber aside		2

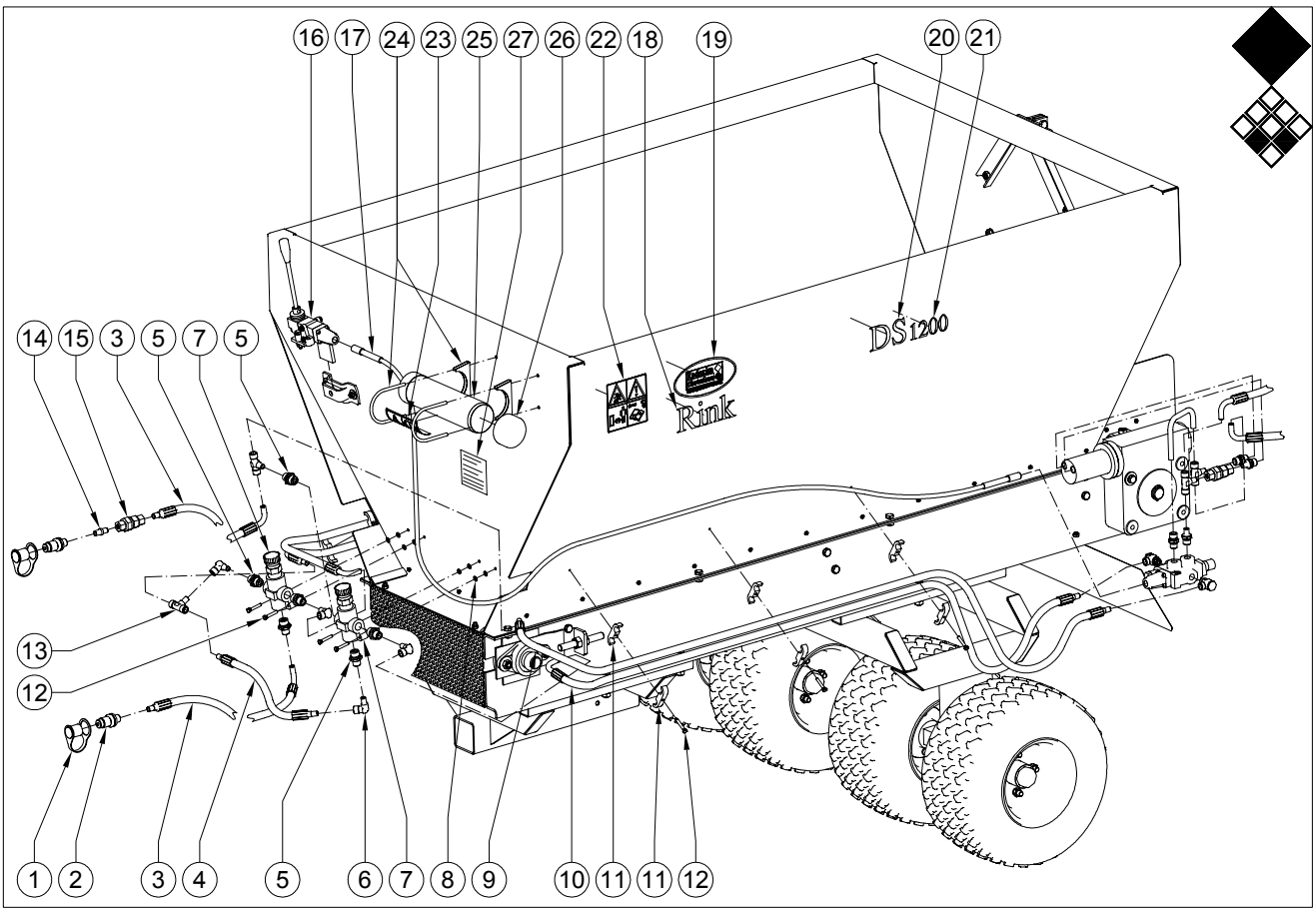

Redexim-Charterhouse Rink DS 1200 pag 05 code 0705

	PART #	DESCRIPTION	REMARKS	QUA
1	RGS 19005	Hydraulic connector cover		2
2	RGS 10747	HD-Male		2
3	RGS 10657	Hydraulic hose 1400mm		2
4	RGS 10659	Hydraulic hose 400mm		1
5	544.130.402	Nippel ½” x 12 mm		6
6	544.120.361	90 decree nippel 12 tube x 12 mm		4
7	RGS 10336	Regulator		2
8	826.060.060	Nut M6		4
9	RGS 10743	Hydraulic hose 2000mm		1
10	RGS 10742	Hydraulic hose 1950mm		1
11	RGS 10745	Clamp		7
12	804.060.350	Bolt M6 x 35		11
13	544.124.126	T connector		2
14	RGS 10040	connector 12x12 mm		1
15	RGS 10341	One way valve		3
16	RGS 10737	Valve complete		1
17	RGS 19006	Cable		1
18	933.260.402	Decall Rink		2
19	900.260.403	Decall Redexim logo		2
20	933.260.418	Decall DS		2
21	933.260.420	Decall 800		2
21	913.260.406	Decall 1200		2
22	933.280.402	Safety decal rink		3
23	900.280.402	Safety label manual		1
24	848.901.200	U bolt complete		2
25	991.143.400	Manual / tool box empty		1
26	991.140.600	Cover manual/tool box		2
27	933.120.416	Manual Rink DS 800/DS 1200		

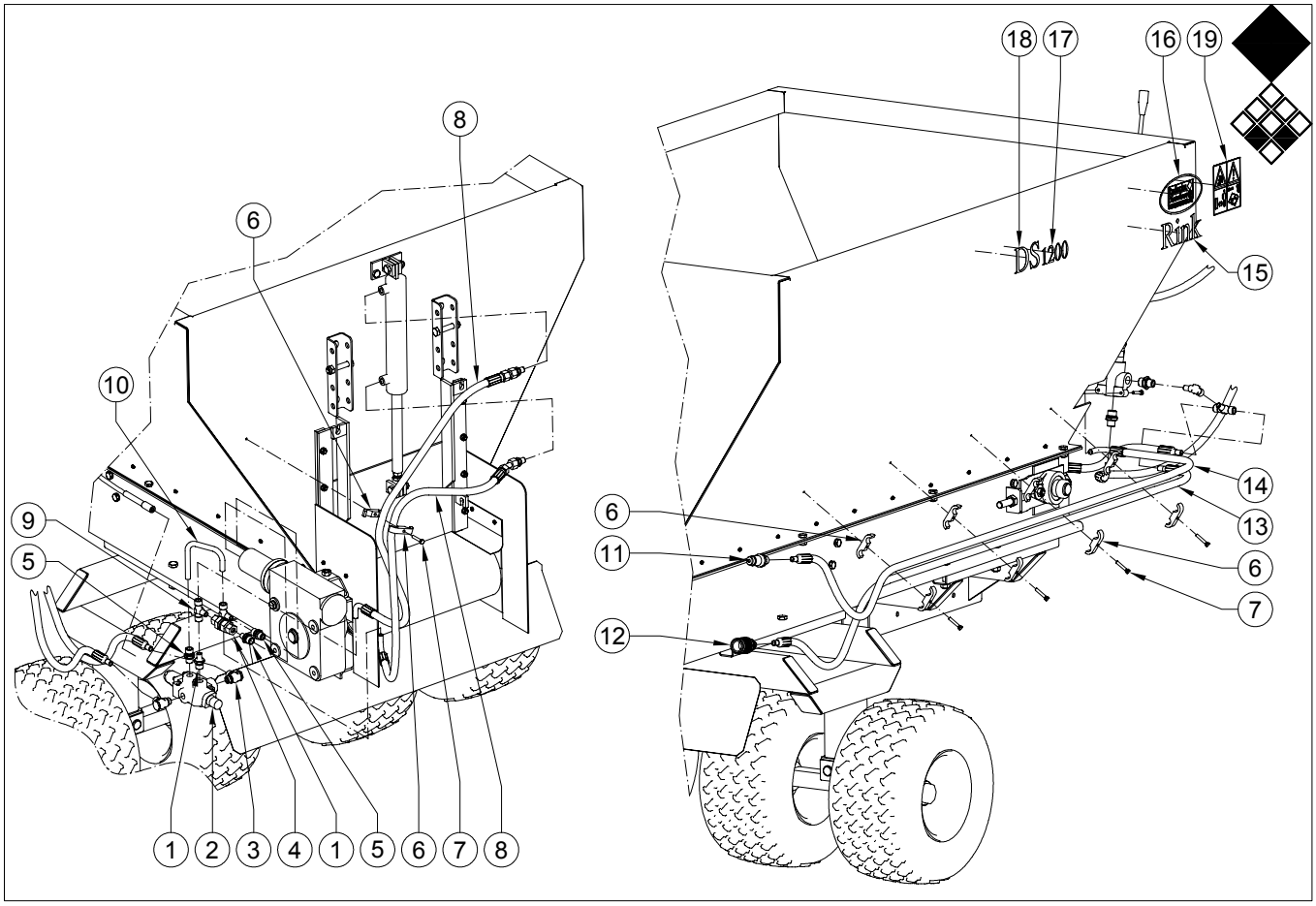

Redexim-Charterhouse Rink DS 1200 pag 06 code 0705

	PART #	DESCRIPTION	REMARKS	QUA
1	543.170.120	Nippel 3/8 x 12 mm		1
2	RGS 10669	Hydraulic Valve		1
3	544.173.430	Screwable 90 decree nippel 3/8 x 12 mm		2
4	RGS 10341	One way valve		1
5	544.170.430	Strait nippel 3/8 x 12 mm		1
6	RGS 10745	Clamp		7
7	804.060.350	Bolt M6 x 35		11
8	RGS 10666	Hydraulic hose 1200mm		2
9	544.124.126	T connector		2
10	RGS 19010	Tube		1
11	RGS 10747	HD-Male		2
12	RGS 10744	HD-Female		2
13	RGS 10741	Hydraulic hose 2450mm		1
14	RGS 10740	Hydraulic hose 2250mm		1
15	933.260.402	Decall Rink		2
16	900.260.403	Decall Redexim logo		2
17	933.260.420	Decall 800		2
17	913.260.406	Decall 1200		2
18	933.260.418	Decall DS		2
19	933.280.402	Safety decal rink		2

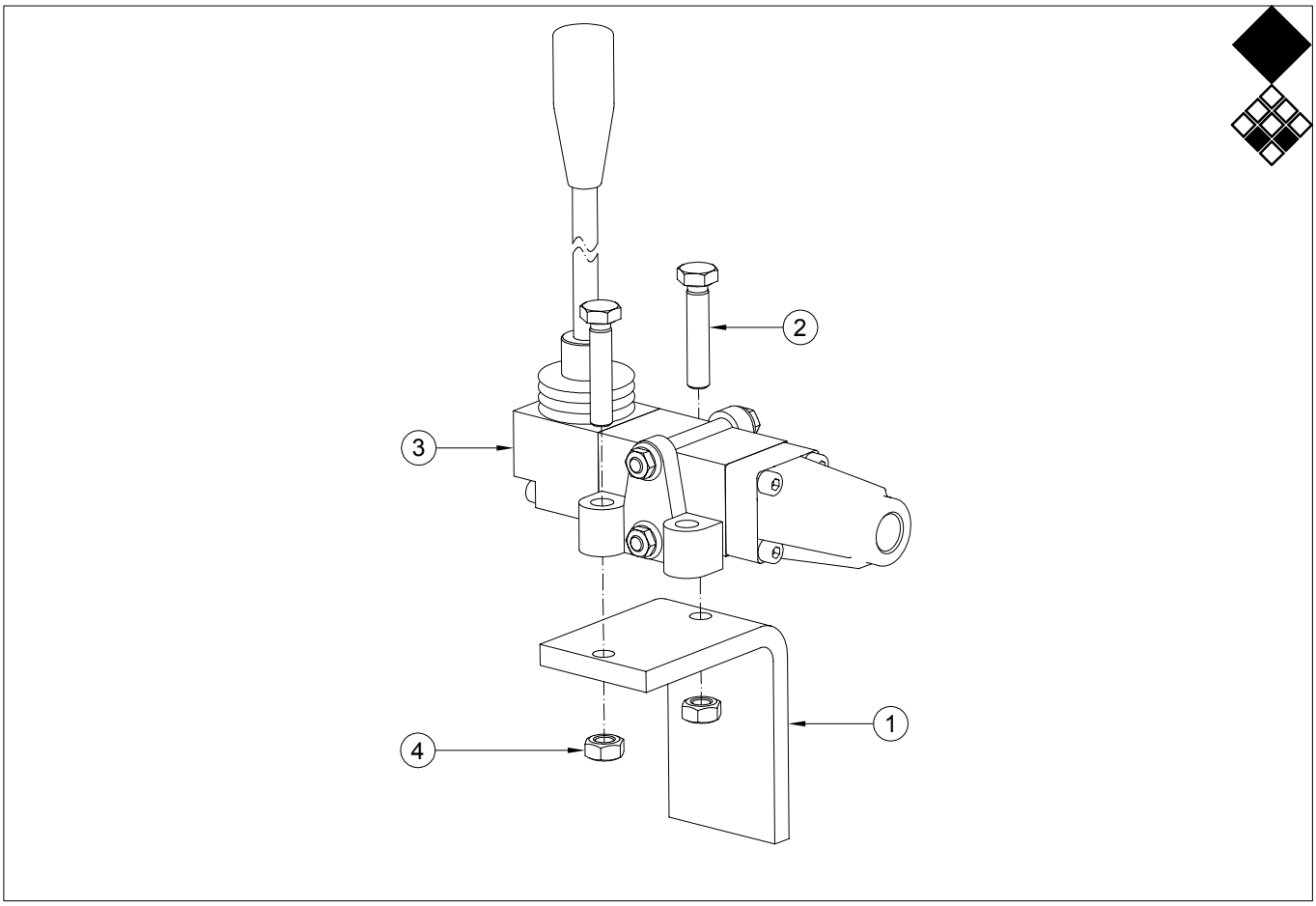

Redexim-Charterhouse Rink DS 1200 pag 07 code 0705

	PART #	DESCRIPTION	REMARKS	QUA
1	RGS 16378	Bracket		1
2	802.080.400	Bolt M8 x 40		2
3	RGS 10737	Valve complete		1
4	826.080.080	Nut M8		2

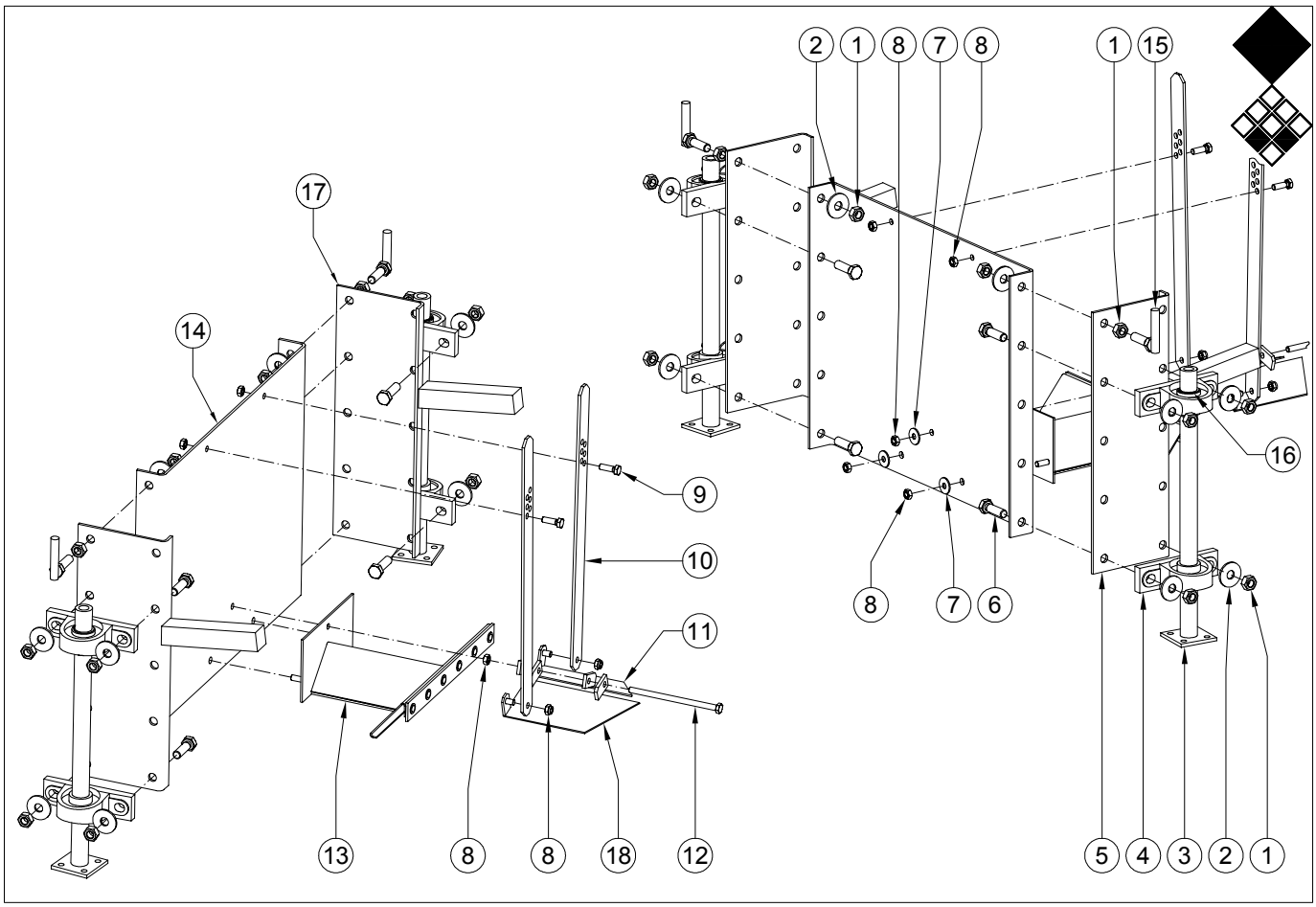

Redexim-Charterhouse Rink DS 1200 pag 08 code 0705

	PART #	DESCRIPTION	REMARKS	QUA
1	826.120.120	Nut M12		12
2	866.120.020	Span washer M12		10
3	RGS 16329	Shaft		2
4	RGS 10133	Bearing		4
5	RGS 16337 right	Spinner shaft holder		1
6	802.120.400	Bolt M12 x 40		8
7	864.080.031	Large washer M8		7
8	826.080.080	Nut M8		7
9	804.080.200	Bolt M8 x 20		2
10	RGS 16357	Sand quide plate adjust handle		2
11	RGS 16353 right	Sand plate right		1
12	802.081.400	Bolt M8 x 140		1
13	RGS 16352	Basic sand quide plate		1
14	RGS 16305	Rear plate		1
15	RGS 16379	Motor torque bolt		2
16	870.025.120	Circlip		2
17	RGS 16337 left	Spinner shaft holder left		1
18	RGS 16353 right	Sand cover plate right		1

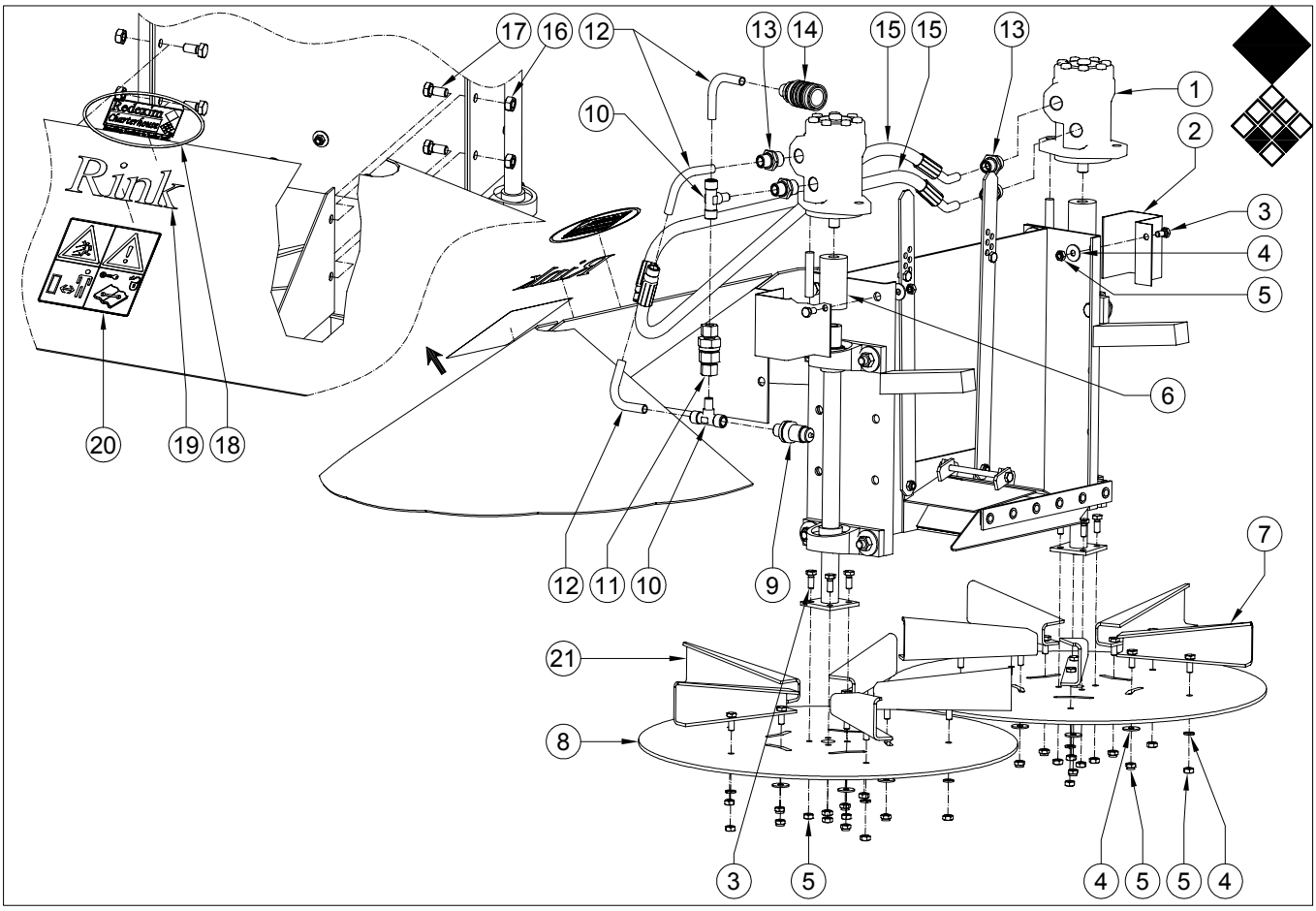

Redexim-Charterhouse Rink DS 1200 pag 09 code 0705

	PART #	DESCRIPTION	REMARKS	QUA
1	RGS 10140	Hydraulic motor		2
2	RGS 16381	Disc shaft cover		2
3	804.080.200	Bolt M8 x 20		6
4	864.080.030	Washer M8		26
5	830.080.080	Lock nut M8		26
6	RGS 3027	Connecting sleeve		2
7	RGS 16302 left	Vane left		6
8	RGS 16301	Disc		2
9	RGS 10747	HD-Male		1
10	544.124.126	T connector		2
11	RGS 10341	Reverse valve		1
12	RGS 19010	Tube		3
13	544.130.402	Fitting		4
14	RGS 10744	HD-Female		1
15	RGS10671	Hydraulic hose 750mm		2
16	826.100.100	Nut M10		4
17	802.100.300	Bolt M10 x 30		4
18	933.260.402	Decall Rink		1
19	900.260.403	Decall Redexim logo		1
20	933.280.402	Safety label rink		1
21	RGS 16302 right	Vane right		6

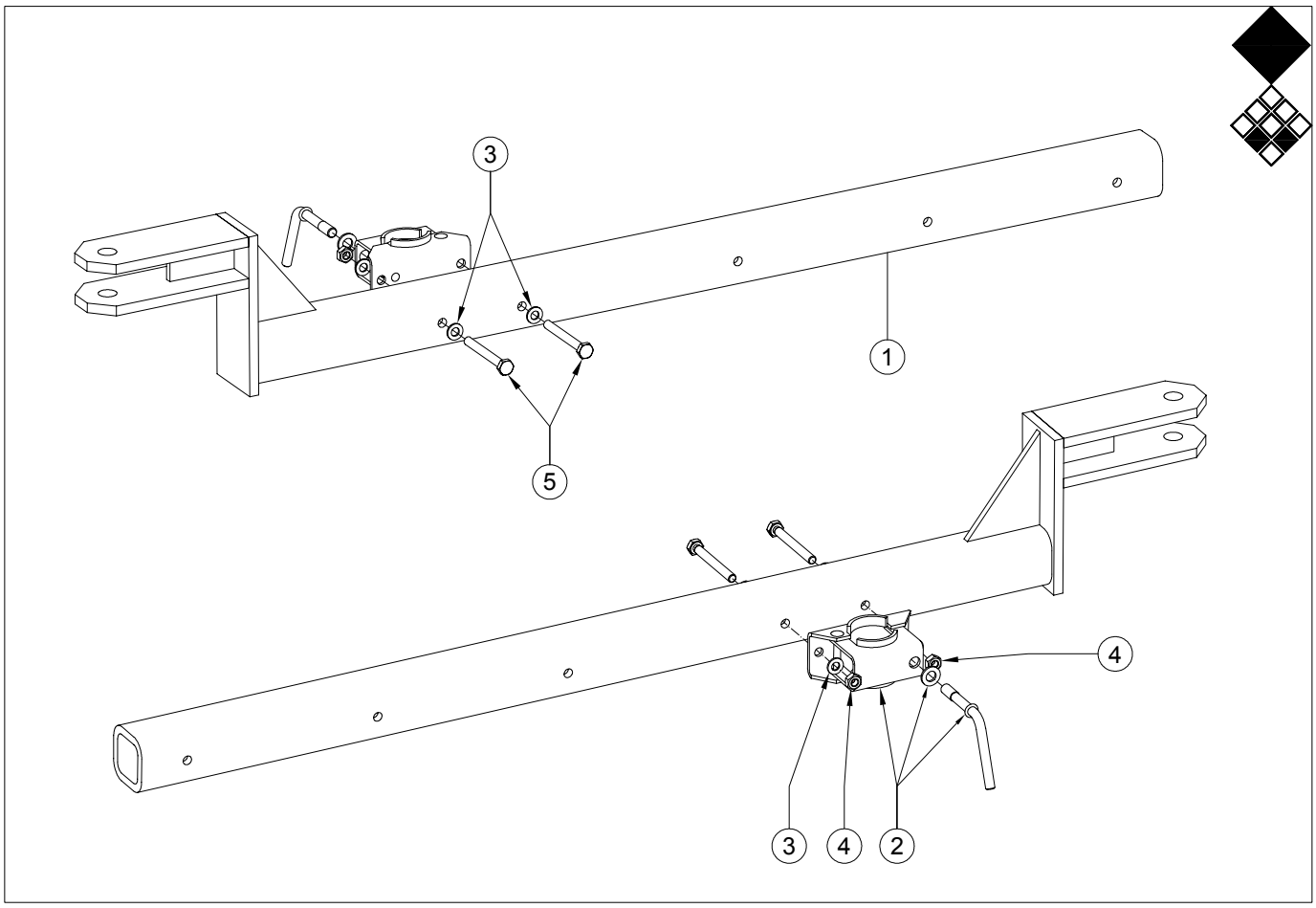

Redexim-Charterhouse Rink DS 1200 pag 10 code 0705

	PART #	DESCRIPTION	REMARKS	QUA
1	RGS 16363	Towing bar		1
2	RGS 10024	Clamping device		1
3	864.100.020	Spring washer M10		4
4	826.100.100	Nut M10		2
5	802.101.000	Bolt M10 x 100		2