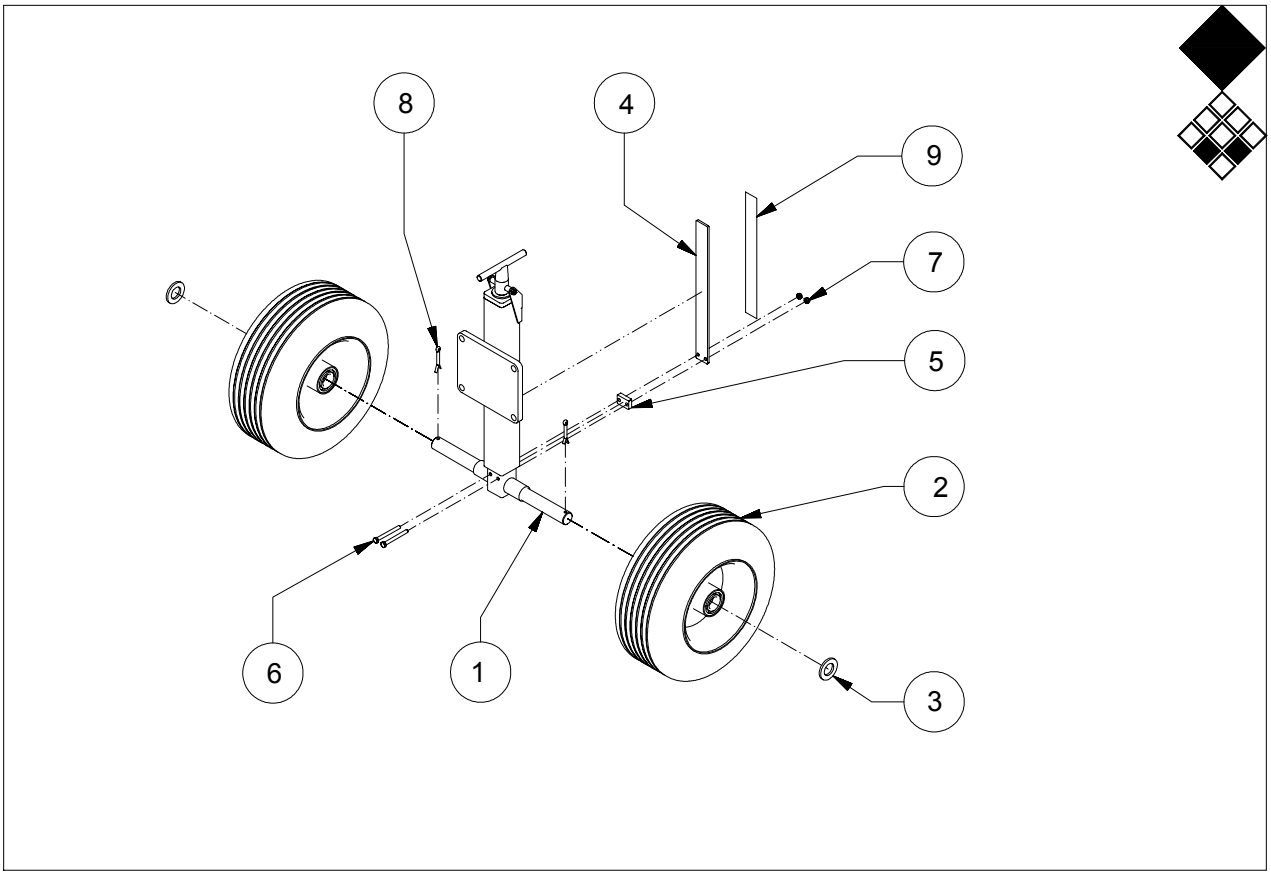

Redexim-Charterhouse Verti-Groom pag 01 code 0637

	PART #	DESCRIPTION	REMARKS	QUA
1	460.325.609	Jack		1
2	511.325.135	Wheel		2
3	864.240.044	Washer M24x44		2
4	464.043.150	Height indicator strip		1
5	464.080.300	Distance block		1
6	802.060.600	Bolt M6 x 60		2
7	830.060.060	Self lock nut M6		2
8	882.050.400	Cotter pin 5 x 40		2
9	900.260.414	Label ruler		1
10	713.250.150	Bearing for wheel 6202 2RS		

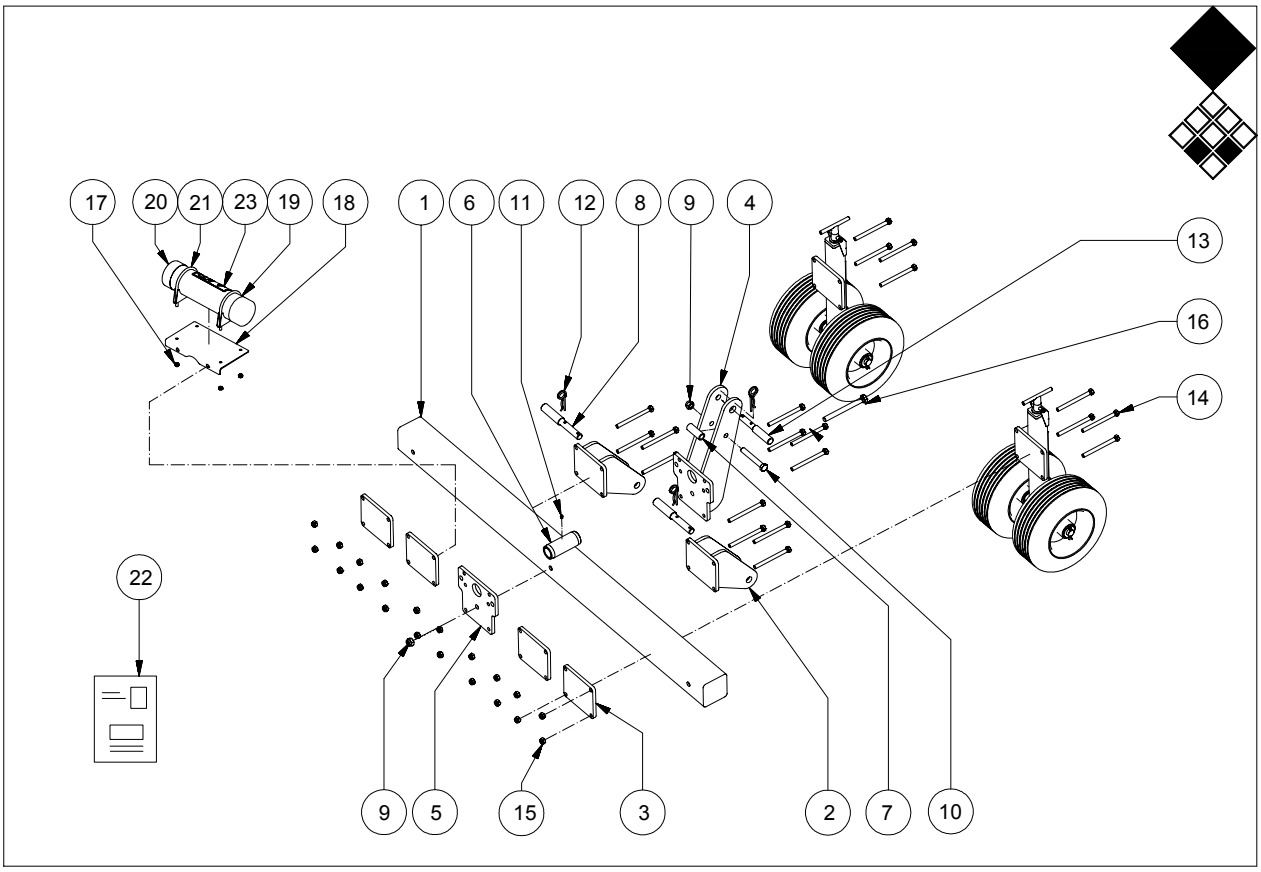

Redexim-Charterhouse Verti-Groom pag 02 code 0637

	PART #	DESCRIPTION	REMARKS	QUA
1	462.109.170	Main chassis beam		1
2	470.121.910	Bottom link 3-point		2
3	468.121.350	Mounting plate square		4
4	470.124.850	Top link 3-point		1
5	468.121.780	Mounting plate rake section pivots		1
6	404.501.240	Pivot bush		1
7	476.250.660	Distance bush 3-point		1
8	521.221.600	3-point pin		2
9	830.160.160	Self lock nut M16		2
10	802.161.110	Bolt M16 x 110		1
11	880.060.100	Grease Nipple M6		1
12	523.051.000	R-clip		3
13	521.191.600	Top link pin		1
14	804.121.400	Bolt M12 x 140		20
15	830.120.120	Self lock Nut M12		20
16	802.161.400	Bolt M16 x 140		1
17	830.080.080	Self lock nut M8		4
18	468.031.430	Mounting plate manual tube		1
19	991.143.400	Manual / Toolbox empty		1
20	991.140.600	Cover tool box		2
21	848.901.200	U-bolt complete		2
22	962.120.200	Manual		1
23	900.280.402	Safety Label Manual		1

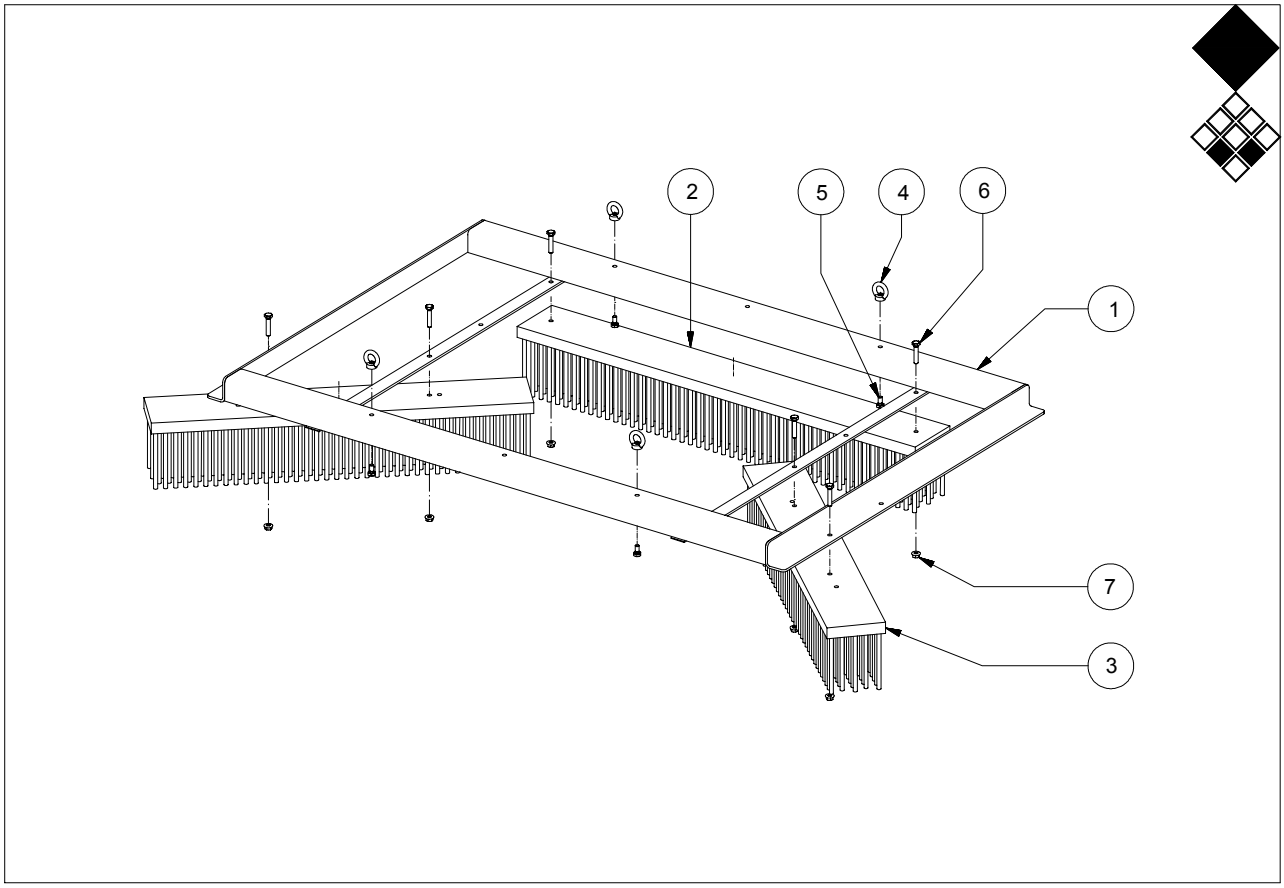

Redexim-Charterhouse Verti-Groom pag 03 code 0637

	PART #	DESCRIPTION	REMARKS	QUA
1	494.099.911	Frame		1
2	386.185.912	Brush Big L=1200mm		1
3	386.185.910	Brush Small L=950mm		2
4	822.100.360	Eye nut M10		4
5	804.100.200	Bolt M10 x 20		4
6	802.100.500	Bolt M10 x 50		6
7	830.100.105	Self lock nut with washer M10		6

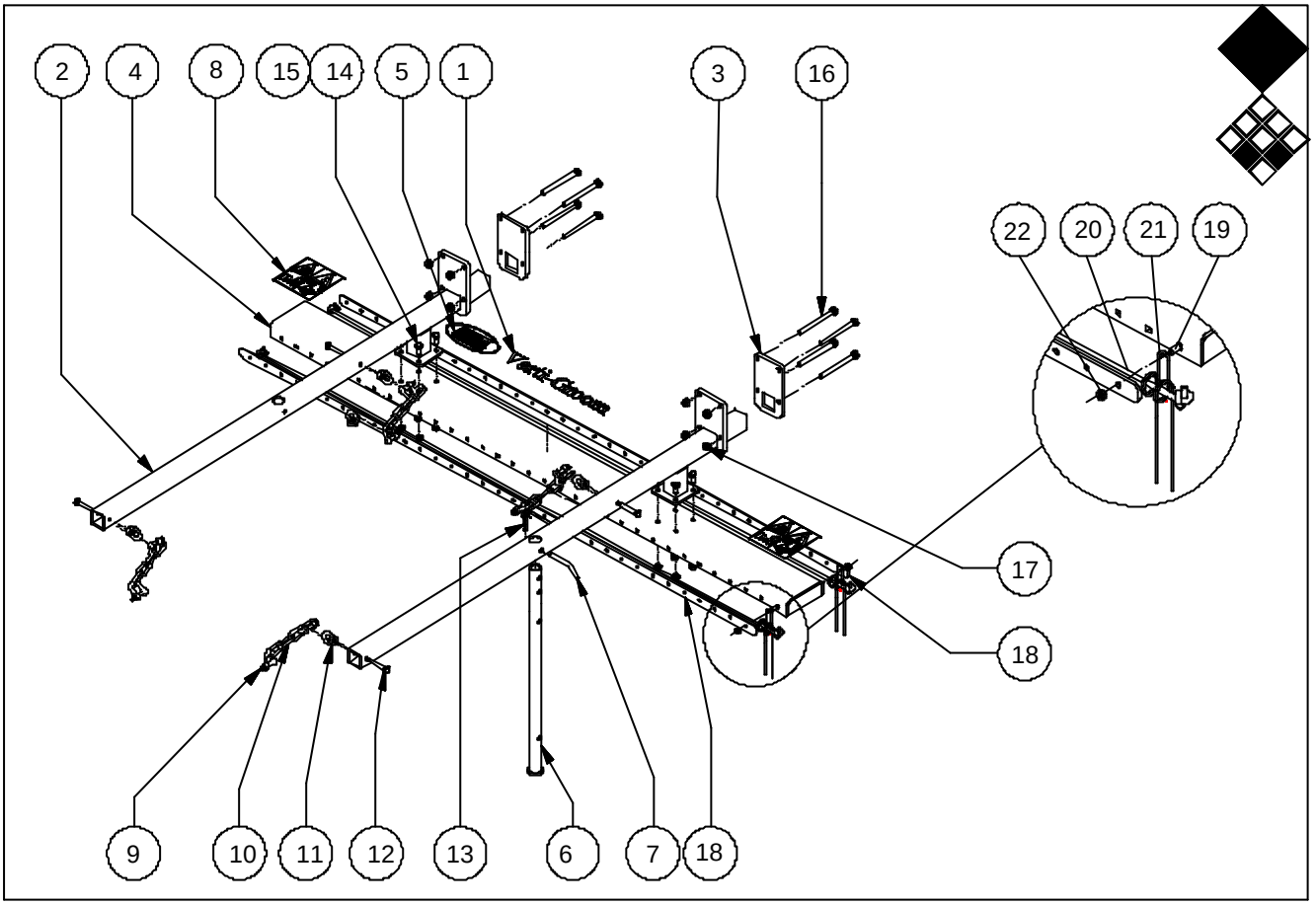

Redexim-Charterhouse Verti-Groom pag 04 code 0706

	PART #	DESCRIPTION	REMARKS	QUA
1	946.260.400	Label Verti-Groom		1
2	494.150.182	Leg Verti-Groom		2
3	468.121.820	Welt mount plate		2
4	494.920.150	Verti-Groom beam		1
5	900.260.403	Label Redexim logo		1
6	460.445.530	Storage stand		1
7	424.121.100	Lock pin		2
8	933.280.402	Safety Label Verti-Groom		2
9	846.100.471	D-shackle 10		8
10	482.081.360	Chain assy Verti-Rake		4
11	822.100.360	Eye nut M10		4
12	802.100.650	Bolt M10 x 65		4
13	523.030.750	R-clip d=4		1
14	804.100.250	Bolt M10 x 25		8
15	830.100.100	Self lock nut M10		8
16	804.121.400	Bolt M12 x 140		8
17	830.120.120	Self lock nut M12		8
18	464.059.202	Clamp strip		2
19	820.080.250	Mush. Bolt M8 x 25		66
20	899.080.200	Rope		2
21	361.103.250	Tine for Verti-Groom		66
22	830.080.080	Self lock nut M8		66